CAPILLARY HYDROMETER **IQ 45 P** SQUARE FRONT

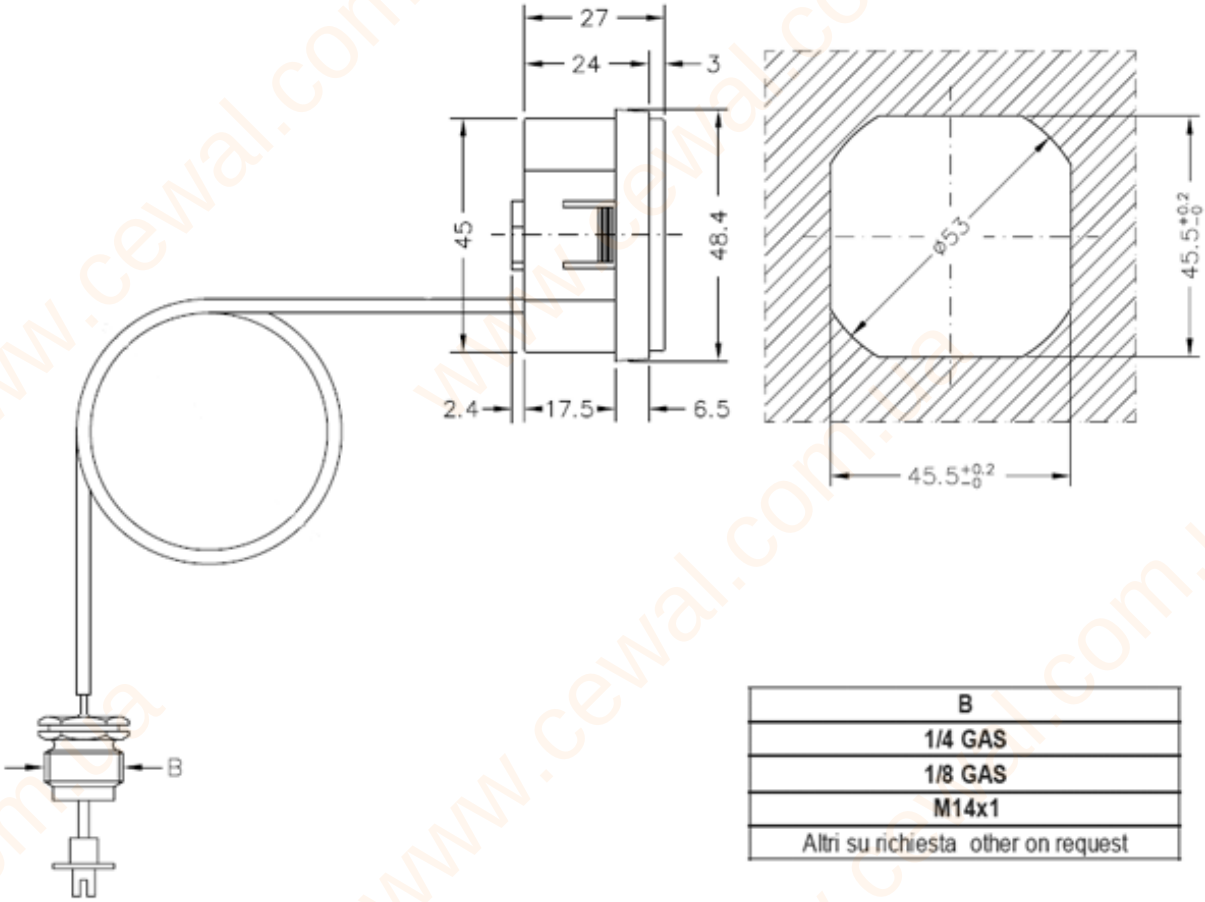

B
1/4 GAS
1/8 GAS
M14x1
Altri su richiesta other on request

Case: reinforced nylon, standard colour black, other colours on request.
Fixing system: moulded-in elastic tabs; metallic bracket on request (IQ 45 PS).
Glass cover: shatterproof metacrylate ester, on request, red maximum index.
Capillaries: bare or black PVC-coated copper; standard lengths 0,5 - 1 - 1,5 metres, other lengths on request.
Fitting: brass; look at the table for available types, other on request.
Movement: copper alloy Boudon type "C" spring; high-sensitivity amplification mechanism in watchmaker's brass.
Dial: printed aluminium. Custom designed dials can be supplied.
Scales: 0/4 or 0/6 bar; other scales on request.
Accuracy: ± 3% of full scale value.

cewal S.p.A. VIA GRAMSCI 48 30010 CAMPONOGARA (VE) ITALIA TEL. +39 041462155 r.a. FAX +39 0414174282 e-mail cewal@cewal.com WEB www.cewal.com

ISO 9001 CERTIFIED

Technical specifications are for information only and may be subject to change without notice.